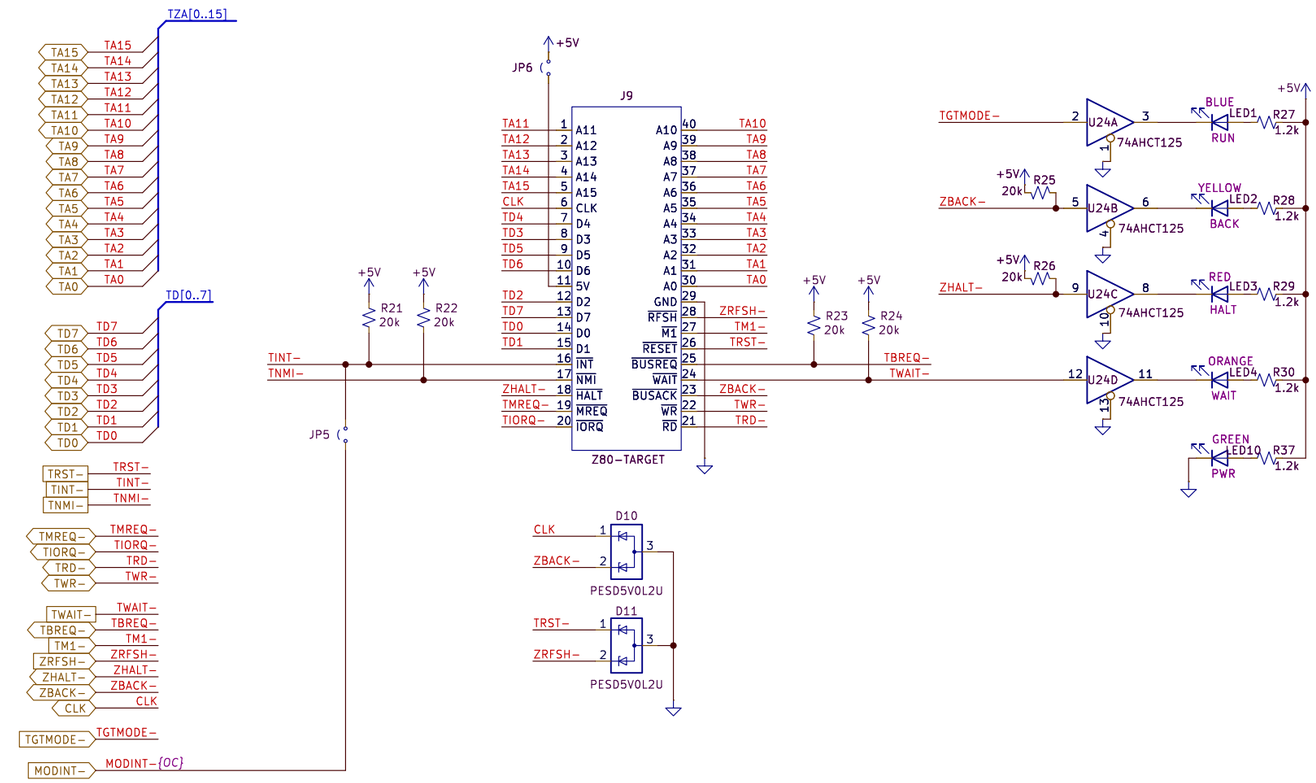

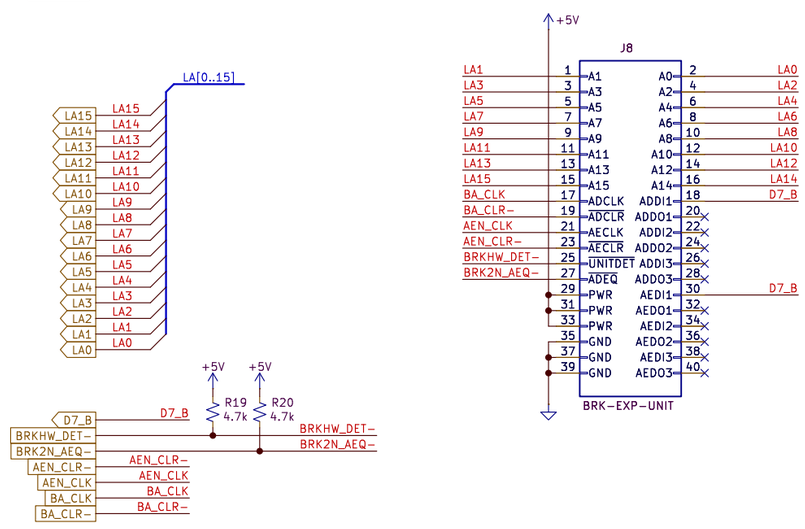

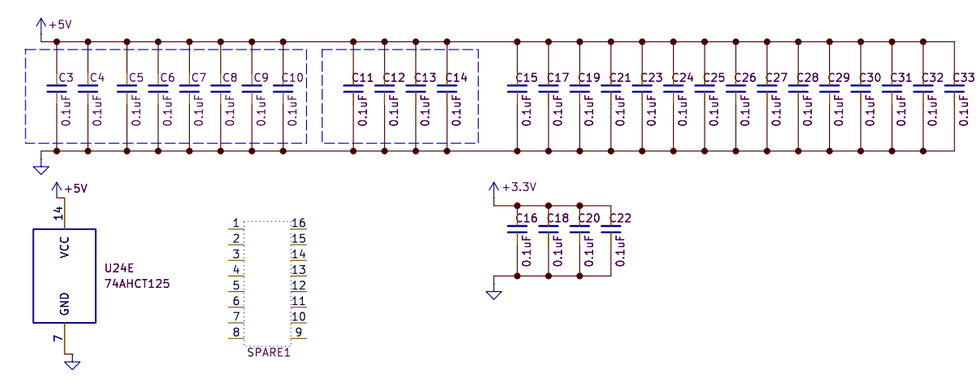

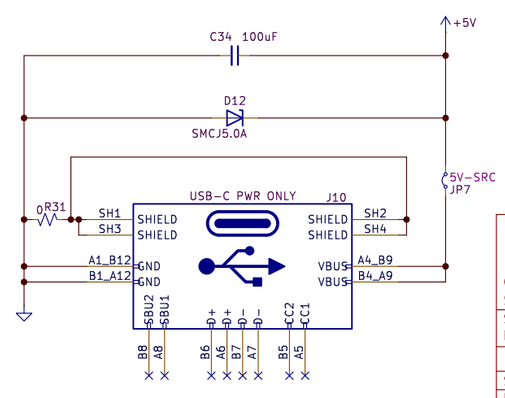

H1 H2 H3 H4

Copyright 2026 AESilky & SmM

SilkyDESIGN / CMOS1

Sheet: /Conn and Expand/
File: conn_exp.kicad_sch

Title: Target Pod and Break Expand

Size: User	Date: 2026-04-10	Rev: PR-1.0
KiCad E.D.A. 9.0.7		Id: 3/4